http://www.cergy-vis.fr
[CERGY-VIS]
ET SI ON PARLAIT SERVICE

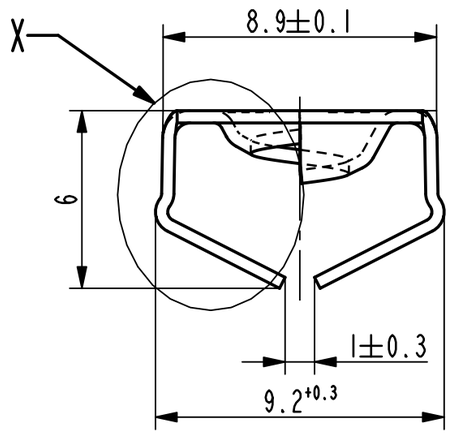

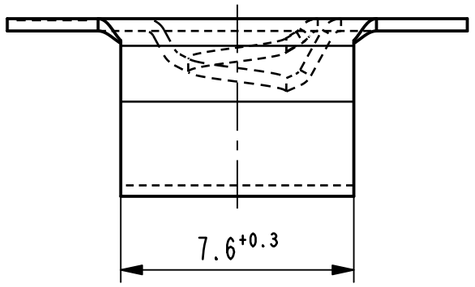

Kennzeichnung zulaessig /
marking permissible

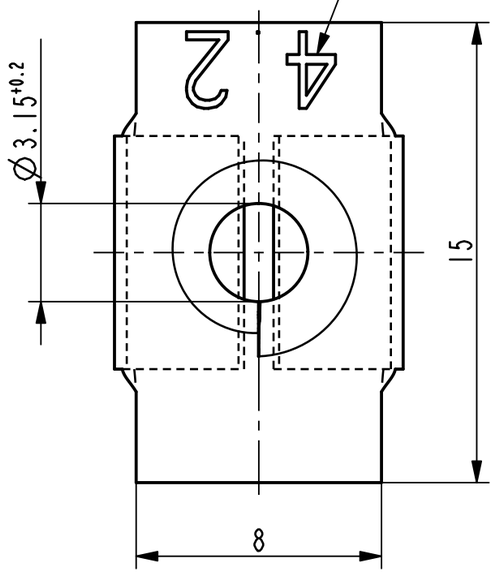

X
10:1

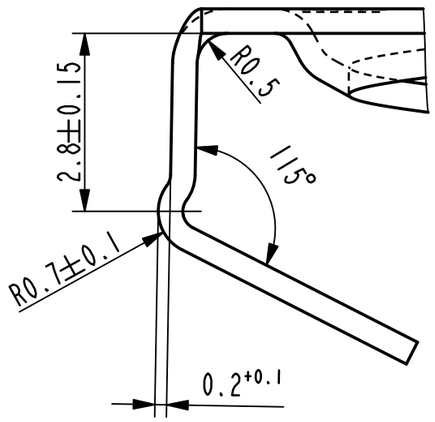

Isometrische Ansicht /
isometric view
2:1

Befestigungsloch / hole pattern □9±0.1
Blechdicke / mat. thickness 1.5 ... 2

	Teil-Nr. / part no.	Oberflaeche / Farbe / finish / colour	Oberfl. Code/ finish code
Ac	012991-0-08	metallhaltige Korrosionsschutzbeschichtung, Farbe silber, GZ metallic corrosion protection coated, colour silver, lubricated	4001
	012991-0-07	metallhaltige Korrosionsschutzbeschichtung, Farbe silber, GZ metallic corrosion protection coated, colour silver, lubricated	4000
	012991-0-06	metallhaltige Korrosionsschutzbeschichtung, Farbe silber metallic corrosion protection coated, colour silver	5412
	012991-0-05	metallhaltige Korrosionsschutzbeschichtung, Farbe silber metallic corrosion protection coated, colour silver	5410
	012991-0-04	phosphatiert / impraegniert phosphated / oiled	5100

Ausfuehrung / Execution

Vor Auslegung einer automatisierten Verarbeitung des Teils sollte Ruecksprache mit Fa. ARaymond gehalten werden.
Fully automatic processing of the part requires prior consultation with ARaymond.

Rev.	Anzahl/ quantity	Aenderungsbeschreibung / modification description	Datum/date	Name
-	-	-	-	-
-	-	-	-	-
-	-	-	-	-
-	-	-	-	-
-	-	-	-	-
-	-	-	-	-
-	-	-	-	-
-	-	-	-	-
Ac	1x	Oberflaechenvariante hinzugefuegt	23.07.13	mj
Ab	-	Oberflaechenvariante 001 (3000) entfernt	16.09.11	Ru

ARaymond
A RAYMOND GmbH & Co.KG
Teichstrasse 57
Germany - 79511 Loerrach
Phone +49 (0) 7621 174-0
Fax +49 (0) 7621 174-225

Bei Verstaendnisproblemen beantragen Sie bitte beim Absender die deutsche Fassung vor jeder Anwendung.
"CONDITIONS OF USE"
This drawing and all information (the "Drawing") disclosed are the exclusive property of ARaymond.
By using this Drawing the Addressee acknowledge and accept that this Drawing
(1) is covered by ARaymond' intellectual property rights or know-how and
(2) is provided under the following conditions who represent a Deposit Agreement.
This Drawing is for Adressee' internal use only limited to its estimation.
Without prior written consent of ARaymond, no permission or rights for any purpose, is hereby granted, such as, without any limitation,
(1) the copy, in part or entirely
(2) and/or the presentation, in part or entirely, to any other third party outside the Addressee' company or in the company but with no interest
(3) and/or the distribution of the Drawing, in part or entirely, in any medium
(4) and/or the creation of any derivative work.
In case of breach of these conditions, Addressee shall indemnify ARaymond from and against all damages (compensatory or consequential), costs, expenses and charges, caused or arising out of or attributable to its willful misconduct, fraud, negligence, infringement of ARaymond' intellectual property rights. If the Addressee does not accept these conditions, please notify ARaymond' sender immediately.

Intellectual property rights	vorbehalten / all rights reserved		Classification code: AC-AD
Ersatz fuer/ substitue for	012991_C_01/Aa/20.09.2006	Entw.Ref./ dev.ref.	Projekt-Nr./ project no.
Maszstab/ scale: 5:1	Format: A3	Allgemeintoleranz/ general tolerance: ±0.25 / ±5°	Datum/ date: 16.09.2011
			Erstellt von/ prepared by: Ruzicka
Projektion / projection		ALL DIMENSIONS ARE IN MILLIMETERS	Freigegeben/ approved: 20130724050311
		Blechdicke/ mat. thickness DIN EN 10140: 0.40	Volumen/ volume (mm³): 95.9 — Gewicht/ weight (g): 0.8

Oberfl./ finish	verzinkt / passiviert farblos zinc plated / passivated colourless	Oberfl. Code/ finish code: 3250
Werkstoffbehandl./ material treatment	zwischenstufenverguetet / austempered 375 ... 475 HV 5	
Werkstoff/ material	C67S DIN EN 10132-4	Mat. code: 1000

Benennung/ title

Prestole-Kaefig

fuer Gewinde EN ISO 1478 - ST4.2

press in nut

for thread EN ISO 1478 - ST4.2

Teil-Nr./ part no.	012991-0-03	Drawing type: C:Customer
Kundenteile-Nr. / customer part no.	-	Blatt / sheet: 1 / 1
CAD system & version: ProE WF4	Dateiname / filename: 012991-0C00	