DWG NO D99269-051M REV

http://www.cergy-vis.fr
[CERGY-VIS]
ET SI ON PARLAIT SERVICE

TYPICAL ASSEMBLY
SCALE 1:1

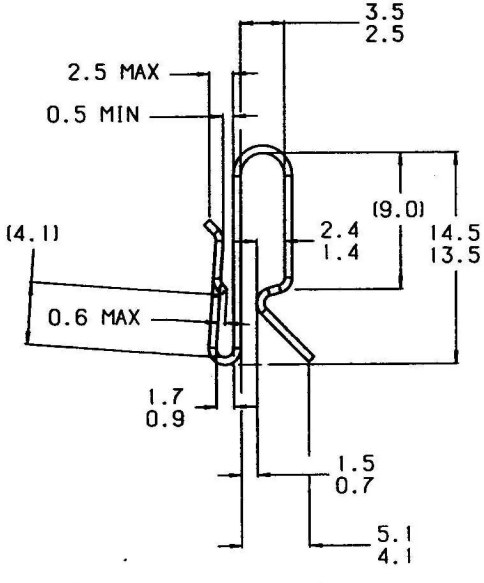

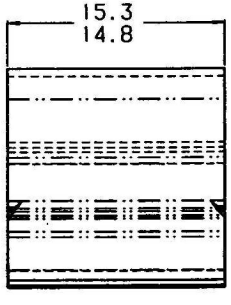

ACTUAL SIZE

Référence
135 218 001
Acier Zingué
(CS-Zn)

NOTE: "T" IDENTIFICATION TO APPEAR ON FACE OF PART.
DIMENSIONING AND TOLERANCING PER ASME Y14.5M.

REVISIONS

E.C.O.	REV	DESCRIPTION	DATE	DR	CK	APP

CONTROLLED IF RED

NOTICE TO PERSONS RECEIVING THIS DRAWING AND/OR TECHNICAL INFORMATION:
TINNERMAN PALNUT ENGINEERED PRODUCTS CLAIMS PROPRIETARY RIGHTS TO THE MATERIAL DISCLOSED HEREIN. THIS DRAWING AND/OR TECHNICAL INFORMATION IS ISSUED IN CONFIDENCE FOR ENGINEERING INFORMATION ONLY AND MAY NOT BE REPRODUCED OR USED TO MANUFACTURE ANYTHING SHOWN OR REFERRED TO HEREIN WITHOUT DIRECT WRITTEN PERMISSION FROM TINNERMAN PALNUT ENGINEERED PRODUCTS. THIS DRAWING AND/OR TECHNICAL INFORMATION IS THE PROPERTY OF TINNERMAN PALNUT ENGINEERED PRODUCTS AND IS LOANED FOR MUTUAL ASSISTANCE.

MARK TOOL:

TINNERMAN PALNUT
ENGINEERED PRODUCTS (CANADA) CORPORATION
P.O. Box 2492
Hamilton, Ontario, Canada
L8N 3K1

DRAWN BY	DATE	CHECKED	SCALE	APPROVED
P. SELVEY	01/30/06	RELEASED Feb 21/06	3:1	1ST. PROD. 21 FEB 2006

REF: O#25652-001

MATERIAL	THICKNESS	HEAT TREAT	FINISH HARDNESS
SAE 1050-1065	0.51	AUSTEMPER	Rc44-51

NAME "S" CLIP

SPECIAL FEATURES:

SHEET: 1
OF: 1

DWG NO D99269-051M

SIZE B

REVISED: MAY 31, 2004