Vor Auslegung einer automatisierten Verarbeitung des Teils sollte Ruecksprache mit Fa. ARaymond gehalten werden.
Fully automatic processing of the part requires prior consultation with ARaymond.

Rev.	Anzahl/ quantity	Aenderungsbeschreibung / modification description	Datum/date	Name
-	-	-	-	-
-	-	-	-	-
-	-	-	-	-
-	-	-	-	-
-	-	-	-	-
-	-	-	-	-
-	-	-	-	-
-	-	-	-	-
-	-	-	-	-
Ca	1x	Bemerkung hinzug.	19.09.11	Ru

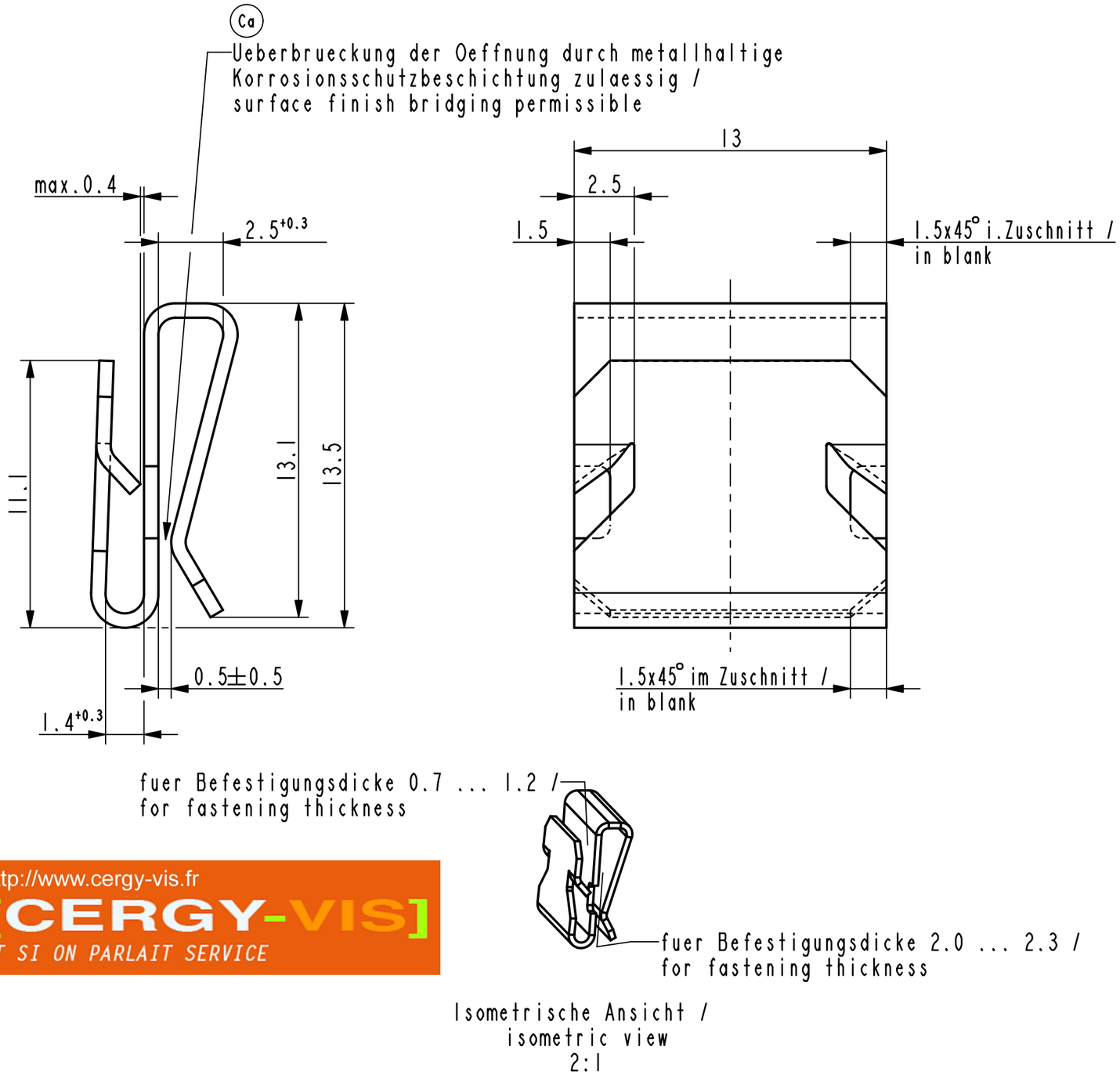

http://www.cergy-vis.fr
[CERGY-VIS]
ET SI ON PARLAIT SERVICE

Teil-Nr. / part no.	Oberflaeche / Farbe / finish / colour	Oberfl. Code/ finish code
019546-0-03	metallhaltige Korrosionsschutzbeschichtung, Farbe silber metallic corrosion protection coated, colour silver	5410
019546-0-02	verzinkt / passiviert farblos zinc plated / passivated colourless	3250

Ausfuehrung / Execution

ARaymond
A RAYMOND GmbH & Co.KG
Teichstrasse 57
Germany - 79511 Loerrach
Phone +49 (0) 7621 174-0
Fax +49 (0) 7621 174-225

Bei Verstaendnisproblemen beantragen Sie bitte beim Absender die deutsche Fassung vor jeder Anwendung.
"CONDITIONS OF USE"
This drawing and all information (the "Drawing") disclosed are the exclusive property of ARaymond.
By using this Drawing the Addressee acknowledge and accept that this Drawing
(1) is covered by ARaymond' intellectual property rights or know-how and
(2) is provided under the following conditions who represent a Deposit Agreement.
This Drawing is for Adressee' internal use only limited to its estimation.
Without prior written consent of ARaymond, no permission or rights for any purpose, is hereby granted, such as, without any limitation,
(1) the copy, in part or entirely
(2) and/or the presentation, in part or entirely, to any other third party outside the Addressee' company or in the company but with no interest
(3) and/or the distribution of the Drawing, in part or entirely, in any medium
(4) and/or the creation of any derivative work.
In case of breach of these conditions, Addressee shall indemnify ARaymond from and against all damages (compensatory or consequential), costs, expenses and charges, caused or arising out of or attributable to its willful misconduct, fraud, negligence, infringement of ARaymond' intellectual property rights. If the Addressee does not accept these conditions, please notify ARaymond' sender immediately.
Intellectual property rights: vorbehalten / all rights reserved

Classification code	CCC--		
Ersatz fuer/ substitue for	019546_C_01/C/30.07.2004	Entw.Ref./ dev.ref.	Projekt-Nr./ project no.
Maszstab/ scale	5:1	Format	A3
Allgemeintoleranz/ general tolerance	±0.3 / ±5°	Datum/ date	19.09.2011
Erstellt von/ prepared by	Ruzicka		
Projektion / projection		ALL DIMENSIONS ARE IN MILLIMETERS	
Freigegeben/ approved	20110923082641		
Blechdicke/ mat. thickness DIN EN 10140	0.60	Volumen/ volume (mm³)	303.4
Gewicht/ weight (g)	2.4		
Oberfl./ finish	verzinkt zinc plated	Oberfl. Code/ finish code	3200
Werkstoffbehandl./ material treatment	zwischenstufenverguetet / austempered 435 ... 535 HV 5		
Werkstoff/ material	C67S DIN EN 10132-4	Mat. code	1000
Benennung/ title	Doppel-U-Klammer edge clip		
Teil-Nr./ part no.	019546-0-01	Drawing type	C:Customer
Kundenteile-Nr. / customer part no.	-	Blatt / sheet	1 / 1
CAD system & version	ProE WF4	Dateiname / filename	019546-0C00