Variant	Finition / Finishes
02	ZnNi(12-15%[Ni])8µ min + Cr3 gris/grey + FOM ProtedurNi75+ Ecotri Gris/grey +Corrosil501 BS RR:720H
03	BRUT DE TREMPE
04	ZnFL Zn-Al 6µ min Magni 2.0 gris/grey BS RR:480H
08	ZnFL Zn-Al + Si 8µ min Magni 2.2 gris/grey BS RR:840H
12	ZnFL Zn-Al 8µ min Magni 3.0 gris/grey BS RR:720H

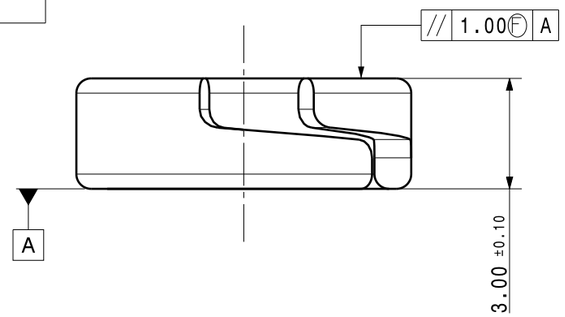

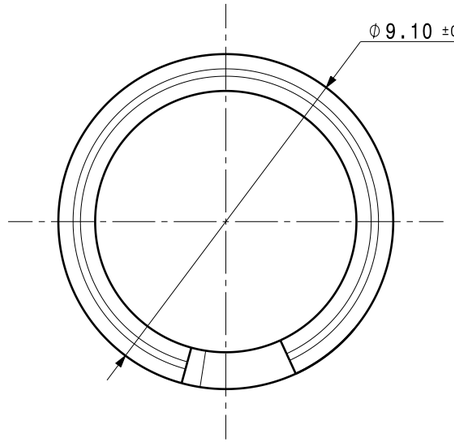

Exemple d'utilisation / *Use condition*

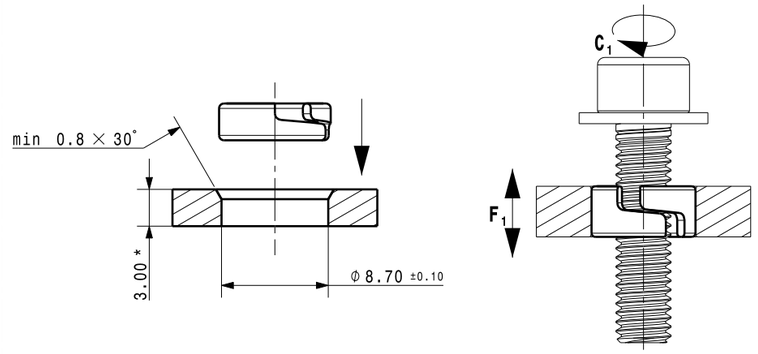

* Epaisseur modifiable / *Adjustable thickness*

- Logement intérieur bague POUR INFORMATION : **Ø6.70mm +0/-0,30**
- Couple de serrage admissible C_1 et tenue sur support F_1 : à valider pour chaque nouvelle application
- Chanfrein d'entrée obligatoire
- Dans le cas d'une distribution automatique et/ou du surmoulage, le process doit être validé par ARaymond

- *Ring inner room FOR INFORMATION :* ***Ø6.70mm +0/-0,30***
- *Admissible tightening torque C_1 and pull out force F_1 : to be validated for each application*
- *Introduction chamfer required*
- *If automatic distribution and/or overmoulding, ARaymond must validate the process*

VUE ISOMETRIQUE / *ISOMETRIC VIEW*
ECHELLE / *SCALE*: 3:1

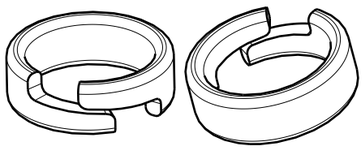

http://www.cergy-vis.fr
[CERGY-VIS]
ET SI ON PARLAIT SERVICE

REV.	Quant.	Indice / revision description	Date	Name
Ag	-	MISE A JOUR VARIANTE 008 600H --> 840H	26.07.13	BVI
Af	-	AJOUT VARIANT 12 / ADD VARIANT 12	25.06.13	GPA

ARaymond
113 cours Berriat BP 157
France - 38019 Grenoble cedex 1
Tel +33 (0) 4 76 33 49 49
Fax +33 (0) 4 76 78 20 50

Si probleme de comprehension, merci de demander la version francaise a ARaymond avant toute utilisation.
"CONDITIONS OF USE"
This drawing and all information (the "Drawing") disclosed are the exclusive property of A.Raymond.
By using this Drawing the Addressee acknowledge and accept that this Drawing
(1) is covered by A.Raymond intellectual property rights or know-how and
(2) is provided under the following conditions who represent a Deposit Agreement.
This Drawing is for Addressee internal use only limited to its estimation.
Without prior written consent of A.Raymond, no permission or rights for any purpose, is hereby granted, such as, without any limitation,
(1) the copy, in part or entirely
(2) and/or the presentation, in part or entirely, to any other third party outside the Addressee company or in the company but with no interest
(3) and/or the distribution of the Drawing, in part or entirely, in any medium
(4) and/or the creation of any derivative work.
In case of breach of these conditions, Addressee shall indemnify A.Raymond from and against all damages (compensatory or consequential), costs, expenses and charges, caused or arising out of or attributable to its willful misconduct, fraud, negligence, infringement of A.Raymond Intellectual Property rights. If the Addressee does not accept these conditions, please notify A.Raymond sender immediately.

Brevets / *Patent rights*	
Classification code	AH-KA
N° Projet / *Project No.*	
Origine / *Origin*	
Chef de projet / *Project Manager*	DEGELIS
Echelle / *scale*	6:1
Format	A3
Tolerance / *General tolerance*	Dimension ± 0.50 ; Angle ± 5.00°
Date	
Realise / *Prepared by*	DELAHOUSSE
ALL DIMENSIONS ARE IN MILLIMETERS	
Approuve / *Approved*	20130726092335
Epaisseur / *Mat. thickness*	1,00
Volume (mm³)	64,7
Poids / *Weight (g)*	0,5
Finition / *finish*	See parts list Voir tableau
Code finition / *finish code*	-
Traitement structural / *Material treatment*	C70D >0,5 : TTH.HR 30 N : 61,3 a 64,7 (42 a 46 HRc)
Matiere / *Material*	C70D -
Mat. code	-
Libelle / Title	**Bague antifluage RONDE** ***Anti-creep ring CIRCULAR***
Reference / *Part no.*	**130037-0-02**
Drawing type	C:Customer
Ref. client / *Customer part no.*	
Planche / *Sheet*	1/1
CAD system & version	CATIA V5 R19 SP9
Nom fichier / *File name*	130037-0C02

VERIFIER L ECHELLE APRES PHOTOCOPIE / BEWARE SCALE AFTER COPY