Variant	Matières / Materials	Traitements structuraux / Material treatments	Finitions / Finishes	Poids / Weight (g)
01	C67S-A	C67S CR >0,5 : TTH.HR 30 N : 61,3 a 64,7 (42 a 46 HRc)	BRUT DE TREMPE	6,3
03	C67S-A	TTH.HR 30 N : 61,3 a 64,7 (42 a 46 HRc)	Zn 10µ min	6,3
17	C67S-A	TTH.HR 30 N : 61,3 a 64,7 (42 a 46 HRc)	ZnNi(12-15%[Ni])8µ min + Cr3 + FOM Gris/grey	6,3
19	C67S-A	TTH.HR 30 N : 61,3 a 64,7 (42 a 46 HRc)	Zn 15µ min +Cr3 Gris/grey	6,3

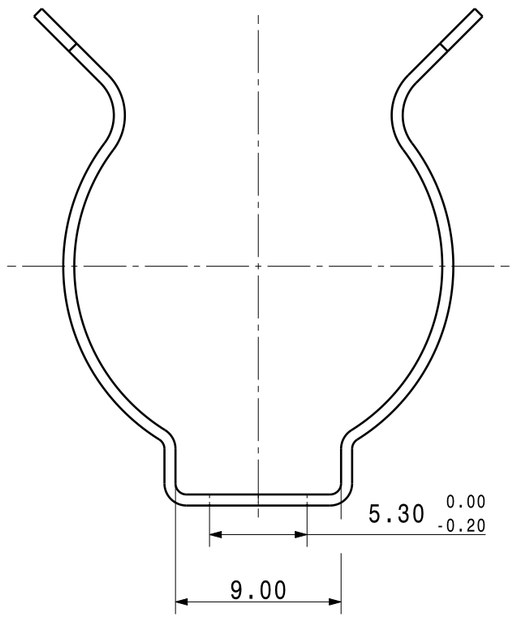

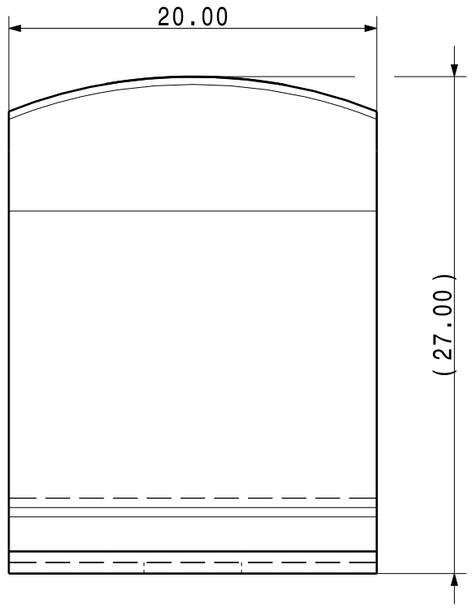

VUE ISOMETRIQUE / *ISOMETRIC VIEW*
ECHELLE / *SCALE*: 2:1

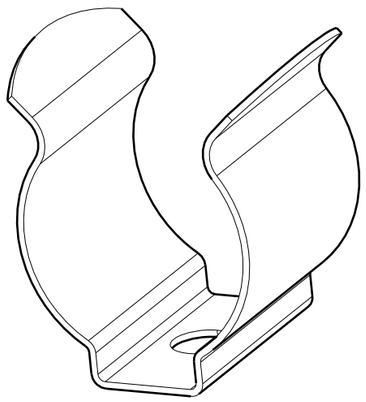

VERIFIER L ECHELLE APRES PHOTOCOPIE / BEWARE SCALE AFTER COPY

Une consultation préalable de A.Raymond SARL est nécessaire pour toute mise en place de la pièce en automatique.
Automatic processing of the part requires prior consultation with A.Raymond SARL.

EXEMPLE D'UTILISATION / *USE CONDITION*
ECHELLE / *SCALE*: 1:1

TUBE/PIPE: Ø21.00 A/TO Ø25.00mm

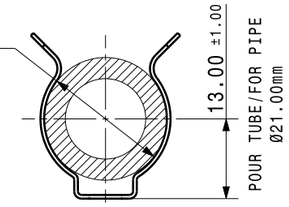

A.Raymond
113 cours Berriat BP 157
France - 38019 Grenoble cedex 1
Tel +33 (0) 4 76 33 49 49
Fax +33 (0) 4 76 78 20 50

Si probleme de comprehension, merci de demander la version francaise a ARaymond avant toute utilisation.
"CONDITIONS OF USE"
This drawing and all information (the "Drawing") disclosed are the exclusive property of A.Raymond.
By using this Drawing the Addressee acknowledge and accept that this Drawing
(1) is covered by A.Raymond intellectual property rights or know-how and
(2) is provided under the following conditions who represent a Deposit Agreement.
This Drawing is for Addressee internal use only limited to its estimation.
Without prior written consent of A.Raymond, no permission or rights for any purpose, is hereby granted, such as, without any limitation,
(1) the copy, in part or entirely
(2) and/or the presentation, in part or entirely, to any other third party outside the Addressee company or in the company but with no interest
(3) and/or the distribution of the Drawing, in part or entirely, in any medium
(4) and/or the creation of any derivative work.
In case of breach of these conditions, Addressee shall indemnify A.Raymond from and against all damages (compensatory or consequential), costs, expenses and charges, caused or arising out of or attributable to its willful misconduct, fraud, negligence, infringement of A.Raymond Intellectual Property rights. If the Addressee does not accept these conditions, please notify A.Raymond sender immediately.

Brevets / *Patent rights*			Classification code: BADD-
N° Projet / *Project No.*	Origine / *Origin*	Chef de projet / *Project Manager*	
Echelle / *scale*: 3:1	Format: A3	Tolerance / *General tolerance*: Dimension ± 0.50, Angle ± 5.00°	Date
			Realise / *Prepared by*: AILHAS.F
		ALL DIMENSIONS ARE IN MILLIMETERS	Approuve / *Approved*: 20110908121831
		Epaisseur / *Mat. thickness*: -	Volume (mm³): 809,3 — Poids / *Weight (g)*: -

Finition / *finish*: Voir nomenclature / See parts list — Code finition / finish code: -

Traitement structural / *Material treatment*: Voir nomenclature / See parts list

Matiere / *Material*: Voir nomenclature / See parts list — Mat. code: -

Libelle / Title

Support tube
-
Pipe clip
-

Reference / *Part no.*: **051955-0-01** — Drawing type: C:Customer

Ref. client / *Customer part no.* — Planche / *Sheet*: 1/1

CAD system & version: CATIA V5 R19 SP7 — Nom fichier / *File name*: 051955-0C01

REV.	Quant.	Indice / revision description	Date	Name
Hb	-	ADD VARIANT 022	08.09.11	GPA

http://www.cergy-vis.fr
[CERGY-VIS]
ET SI ON PARLAIT SERVICE